FIRST ANGLE PROJECTION

(ALL DIMENSIONS ARE IN mm)

BHEL DRG. NO. PY-DS-1-M088-1260-02 | SHT. 01 OF 01

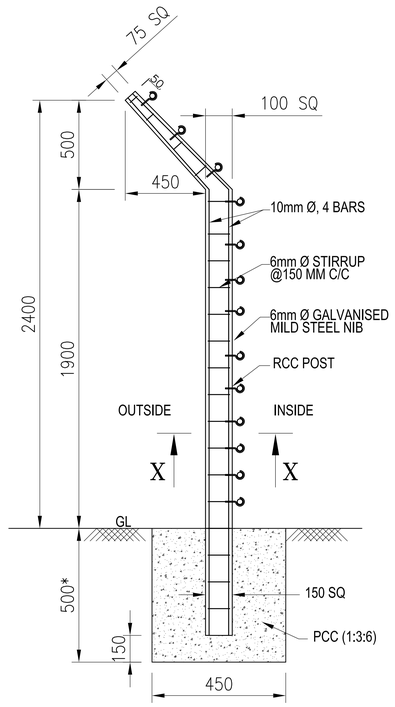

SECTION Y–Y

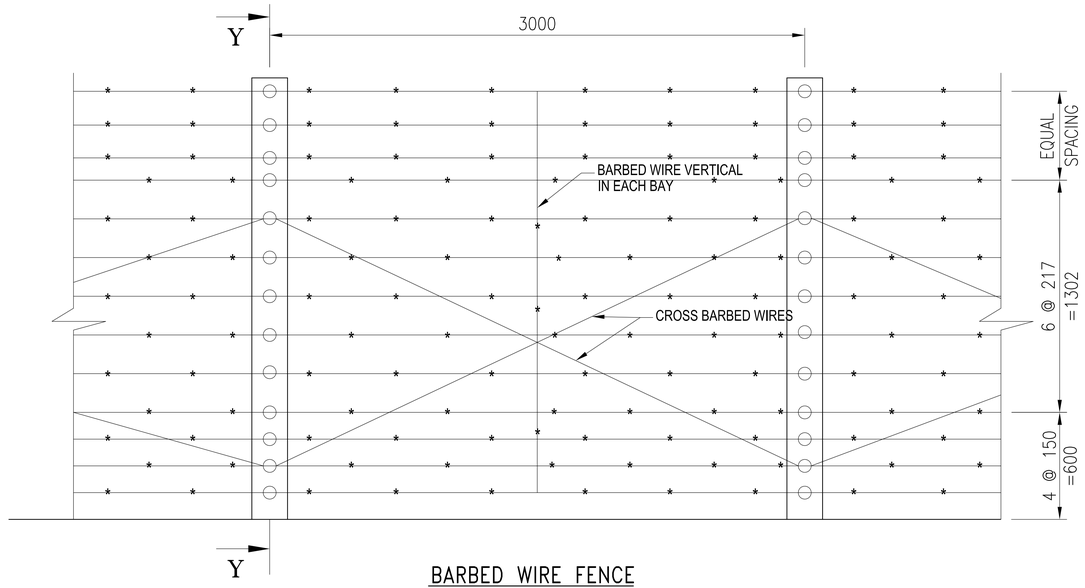

BARBED WIRE FENCE

NOTES:

1. ALL DIMENSIONS ARE IN MILLIMETRES UNLESS OTHERWISE MENTIONED.
2. GRADE OF CONCRETE MIX SHALL BE RCC M25.
3. INTERMEDIATE POST AT 3M SPACING AND STRAINING POSTS AT EVERY 15.0M, AT ALL ENDS & CORNERS SHALL BE ERECTED AS DIRECTED BY ENGINEER IN–CHARGE.
4. STRUT SHALL BE PROVIDED FOR ALL STRAINING POST, END AND CORNER POST.
5. BARBED WIRE SHALL BE TWIN GI WIRE, 2.5MM DIAMETER EACH, WITH BARBS SPACED AT 150MM CONFIRMING TO IS 278.
6. ALL CORNER POST WILL HAVE ONE STAY POST IN ORTHOGONAL DIRECTION OF THE FENCE DIRECTION.
7. ALL REINFORCEMENT SHALL BE HIGH STRENGTH DEFORMED TMT STEEL BAR OF GRADE Fe500 CONFORMING TO IS:1786 (LATEST).
8. CLEAR COVER FOR MAIN REINFORCEMENT SHALL BE 15MM.

*: MINIMUM DEPTH OF FOUNDATION SHALL BE 500MM BELOW NGL

FOR TENDER PURPOSE ONLY

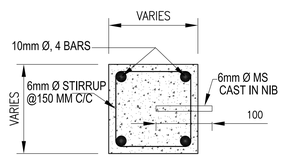

ENLARGED SECTION X–X

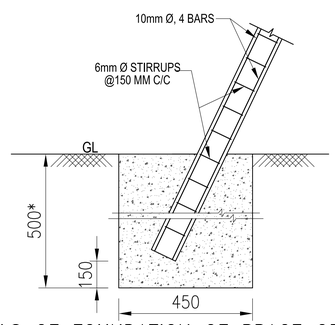

DEATAILS OF FOUNDATION OF BRACE OR STRUT @15M SPACING/FOR EVERY 5 CLOUMN POSTS

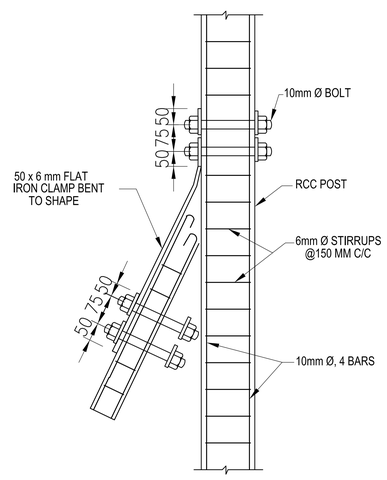

DETAILS OF JUNCTION OF STRAINER POST AND BRACE OR STRUT

PROJECT : 65MWp SOLAR POWER PLANT

CUSTOMER: NEYVELI LIGNITE CORPORATION LTD. NEYVELI–TAMILNADU

BHARAT HEAVY ELECTRICALS LTD. UNIT : HYDERABAD

	NAME	SIGN.	DATE	NO.OF VAR.
DRN.	SKP	–sd–	13.08.16	N.A.
CHD.	PVG	–sd–	13.08.16	
APPD.	EC	–sd–	13.08.16	

REV.	DATE	ALTERED	CHD/APPD
01	27.08.16	ALTERED SKP	CHD/APPD VENU/ESHAN
		REVISED AS PER CUSTOMER COMMENTS.	

DEPT. PE&SD | CODE 450 | UNTOL. DIMS. GR. g/M/f | SCALE | WEIGHT (KG) N.A. | REF. TO ASSY. DRG. N.A. | ITEM NO. N.A. | NO.OF ITEMS N.A.

TITLE: DETAILS OF FENCING

CARD CODE N.A | BHEL DRG NO. PY-DS-1-M088-1260-02 | REV. 01 | SHT. No 01 | NO. OF SHT. 01

GENERAL DIMENSIONAL LIMITS,FITS & TOLERANCES AS PER HY0230261

THE INFORMATION ON THIS DOCUMENT IS THE PROPERTY OF BHARAT HEAVY ELECTRICALS LIMITED. IT MUST NOT BE USED DIRECTLY OR INDIRECTLY IN ANY WAY DETRIMENTAL TO THE INTEREST OF THE COMPANY

COMPUTER FILE NAME | REF. DRG. NO. | SIGN. AND DATE | INVENTORY NO

RESTRICTED USE
Aug Sat 27 14:04 2016
This Drawing is printed from Engineering Digital Archive System (EDAS).
Therefore signatures are not essentially required.